BASELINE
BY LUMECON

PROJECT NAME: _____ CATALOG #: _____

NOTES: _____ DATE: _____

BLS-FLD
FLOOD LIGHT

BLS-FLD Flood Light low-profile and stylish exterior design can be well integrated into various architectural environments. Available in four sizes and multiple lumen packages from 15W-120W, this product also achieve up to 150lm/W efficiency. Reliable IP65 structural design, BLS-FLD is very suitable for general flood lighting of courtyards, driveways, buildings, signage, flag poles and billboards.

15W, 27W, 40W | 65W | 85W | 120W

SPECIFICATIONS FEATURES

Color Temperature Tuning: Capable of delivering 3000K, 4000K & 5000K color temperatures

Construction: Die-cast aluminum optimize the best heat dissipation management as the main part of the fixture, which effectively improves the LED efficiency. Durable surface coating powder spraying and fully sealed tempered glass can extend the durability of the fixture.

Lens: The heat-resistant and impact-resistant toughened glass maximizes light extraction while obtaining a great night appearance.

Installation: 1/2" NPS Knuckle, Slipfitter, Trunnion and Yoke are all available.

Controls: Photocell optional.

CRI: 70

Voltage: 120-277V

Optics: NEMA Type 7 (7H x7V)

Lifespan: Estimated 50,000 Hour based on IES LM-80 results and TM-21 calculations.

Operating Temperature: -40°C to 40°C (-40˚F - + 104˚F).Note: Operating with emergency battery temperature range: 10°C to 40°C (+50˚F - + 104˚F)

Power Factor: > 0.90, THD <20%

Listings: cULus, IP65, Suitable for Wet location, RoHS compliant, Meets LM-79 LM-80 Standards.

Warranty: 5 year warranty

NOTE- Actual performance may differ as a result of end-user environment and application. All values are design or typical values, measured under laboratory conditions at 25°C(±5°C) specifications subject to change without notice.

ORDERING GUIDE

SAMPLE: BLS-FLD-27-1-ADJ-D-PC-TR-B77

[ ] – [ ] – [ ] – [ ] – [ ] – [ ] – [ ] – [ ]

MODEL	WATTAGE	VOLTAGE	CCT	FINISH	PHOTOCELL	MOUNTING	NEMA
BLS-FLD	**15** 15W, 12W, 10W, 6W **27** 27W, 20W, 15W, 11W **40** 40W, 29W, 21W, 14W **65** 65W, 54W, 41W, 27W **90** 90W, 68W, 50W, 22W **120** 120W, 98W, 71W, 52W	**1** 120-277V	**ADJ** Adjustable Color Temperature	**D** Dark Bronze **CC** Custom Color	**PC** 120-277V **BLANK** Without Photocell	**TR**[1] Trunnion **KN**[1] Knuckle **YK**[2] Yoke **SP**[2] Slipfitter	**B77** 7Hx7V

NOTE:
1. 15W,27W,40W,65W only suitable for knuckle and trunnion. 2. 85W,120W only suitable for slipfitter and yoke

Specifications and photometric data are subject to change at any time without notice. REV:03172023

STRUCTURAL DESIGN

PHOTOCELL (Option)

Optional photocell allows for security and energy savings

VISOR

All models have an integrated visor that comes with a cover that can reduce glare

OPTICS

A high-reflective white reflector and tempered glass are used to shape NEMA Type 7 (7H x7V)

HOUSING

One-piece die-cast aluminum housing with optimal thermal management both enhances LED efficacy and extends fixture's life

MOUNTING

MFD11 have a powerful 1/2 NPS knuckle mount, and also available with either slipfitter or yoke(trunnion) mount

1/2" Knuckle Mount
(15W/27W/40W/65W)

Trunnion Mount
(15W/27W/40W/65W)

Slipfitter Mount
(85W/120W)

Yoke Mount
(85W/120W)

PHOTOMETRICS

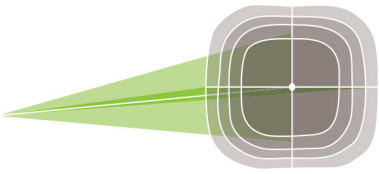

NEMA Type 7 (7H x7V)

Specifications and photometric data are subject to change at any time without notice. REV:03172023

PERFORMANCE DATA

SYSTEM WATTS	VOLTAGE	DIST.TYPE	CRI	LUMENS (3000K)	LPW (3000K)	LUMENS (4000K)	LPW (4000K)	LUMENS (5000K)	LPW (5000K)
15W	120-277V	7Hx7V	70	2050lm	137 lm/W	2100lm	140 lm/W	2100lm	140 lm/W
27W	120-277V	7Hx7V	70	3500lm	130 lm/W	3600lm	133 lm/W	3600lm	133 lm/W
40W	120-277V	7Hx7V	70	5700lm	143 lm/W	5800lm	145 lm/W	5800lm	145 lm/W
65W	120-277V	7Hx7V	70	9200lm	142 lm/W	9400lm	145 lm/W	9400lm	145 lm/W
85W	120-277V	7Hx7V	70	12000lm	141 lm/W	12500lm	147 lm/W	12500lm	147 lm/W
120W	120-277V	7Hx7V	70	17500lm	146 lm/W	18000lm	150 lm/W	18000lm	150 lm/W

ELECTRICAL LOAD

Number Of Drivers	Driver Current (mA)	Nominal Power (W)	INPUT VOLTAGE (V)	CURRENT (Amps)
1	230	15	120	0.13
		15	208	0.07
		15	240	0.06
		15	277	0.05
1	450	27	120	0.23
		27	208	0.13
		27	240	0.11
		27	277	0.10
1	680	40	120	0.33
		40	208	0.19
		40	240	0.17
		40	277	0.14
1	980	65	120	0.54
		65	208	0.31
		65	240	0.27
		65	277	0.23
1	730	85	120	0.75
		85	208	0.43
		85	240	0.38
		85	277	0.32
1	960	120	120	1.00
		120	208	0.58
		120	240	0.50
		120	277	0.43

Specifications and photometric data are subject to change at any time without notice. REV:03172023

DIMENSIONS

Knuckle Mount
(15W/27W/40W/65W)

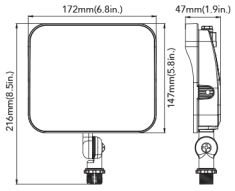

Trunnion Mount
(15W/27W/40W/65W)

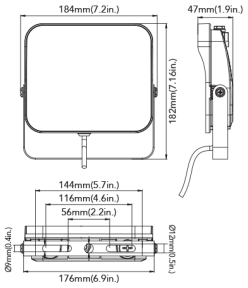

Knuckle Mount
(65W)

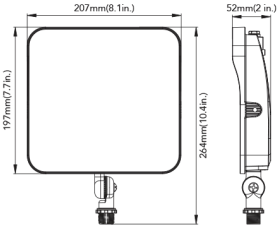

Trunnion Mount
(65W)

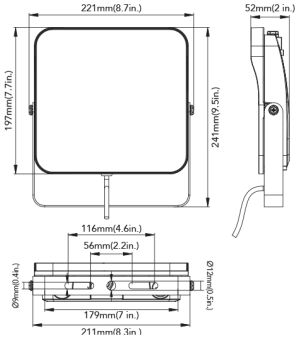

Slipfitter Mount
(85W)

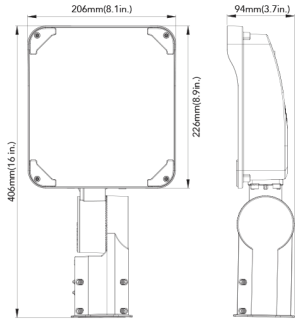

Yoke Mount
(85W)

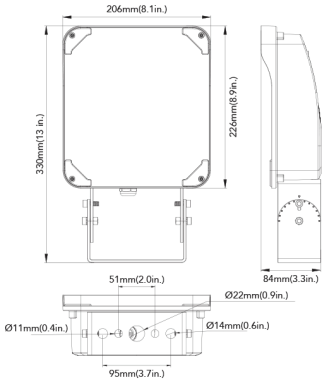

Slipfitter Mount
(120W)

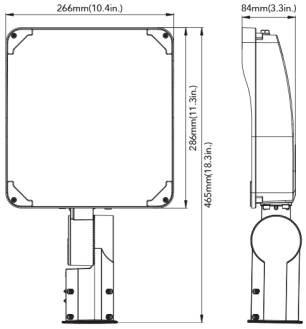

Yoke Mount
(120W)

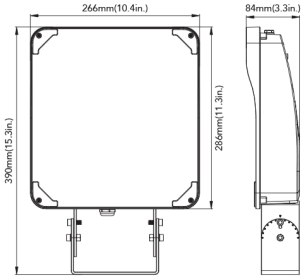

Specifications and photometric data are subject to change at any time without notice. REV:03172023